M74HC09

Quad 2-input and gate (open drain)

Features

- HIgh Speed:
  t_{PD} = 7ns (Typ.) at V_{CC} = 6V
- Low power dissipation:
  I_{CC} = 1µA (Max.) at T_A = 25°C
- High noise immunity:
  $V_{NIH} = V_{NIL}$ = 28 % V_{CC} (Min.)
- Balanced propagation delays:
  $t_{PLH} \cong t_{PHL}$
- Wide operating voltage range:
  V_{CC} (Opr) = 2V to 6V
- Pin and function compatible with 74 series 09

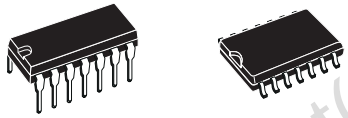

DIP-14 SO-14

Description

The M74HC09 is an high speed CMOS Quad 2-input open drain and gate fabricated with silicon gate C^2MOS technology.

The internal circuit is composed of 3 stages including buffer output, which enables high noise immunity and stable output.

All inputs are equipped with protection circuits against static discharge and transient excess voltage.

Order codes

Part number	Package	Packaging
M74HC09B1R	DIP-14	Tube
M74HC09M1R	SO-14	Tube
M74HC09RM13TR	SO-14	Tape and reel

Obsolete Product(s) - Obsolete Product(s)
Obsolete Product(s) - Obsolete Product(s)

Contents

1 Pin settings 3

1.1 Pin connection 3

1.2 Pin description 3

2 Device summary 4

3 Maximum rating 5

3.1 Recommended operating conditions 5

4 Electrical characteristics 6

5 Test circuit 8

6 Waveforms 8

7 Package mechanical data 9

8 Revision history 12

Obsolete Product(s) - Obsolete Product(s)
Obsolete Product(s) - Obsolete Product(s)

1 Pin settings

1.1 Pin connection

Figure 1. Pin connection (top through view)

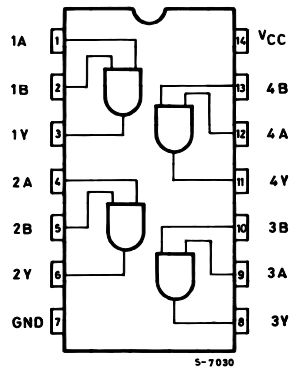

1.2 Pin description

Table 1. Pin description

Pin N°	Symbol	Name and function
1, 4, 9, 12	1A to 4A	Data Inputs
2, 5, 10, 13	1B to 4B	Data Inputs
3, 6, 8, 11	1Y to 4Y	Data Outputs
7	GND	Ground (0V)
14	V_{CC}	Positive Supply Voltage

Obsolete Product(s) - Obsolete Product(s)
Obsolete Product(s) - Obsolete Product(s)

2 Device summary

Figure 2. IInput and output equivalent circuit

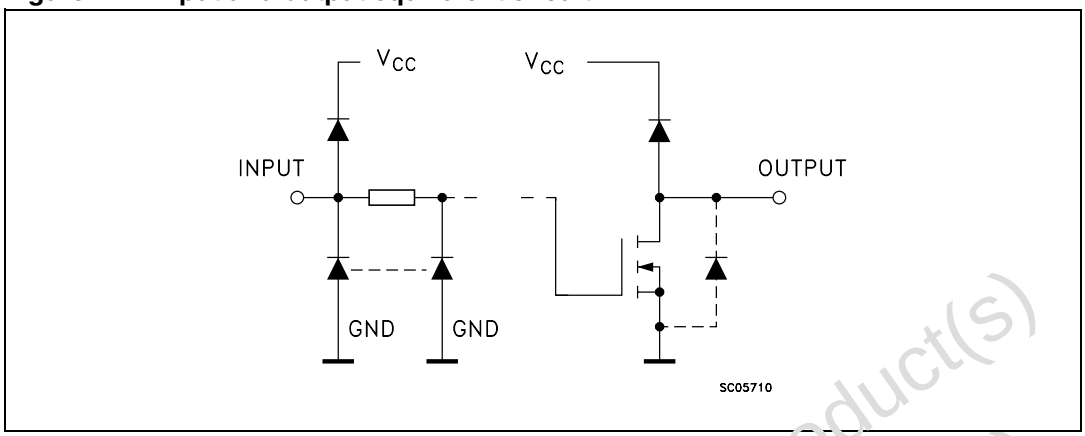

Figure 3. Logic diagram

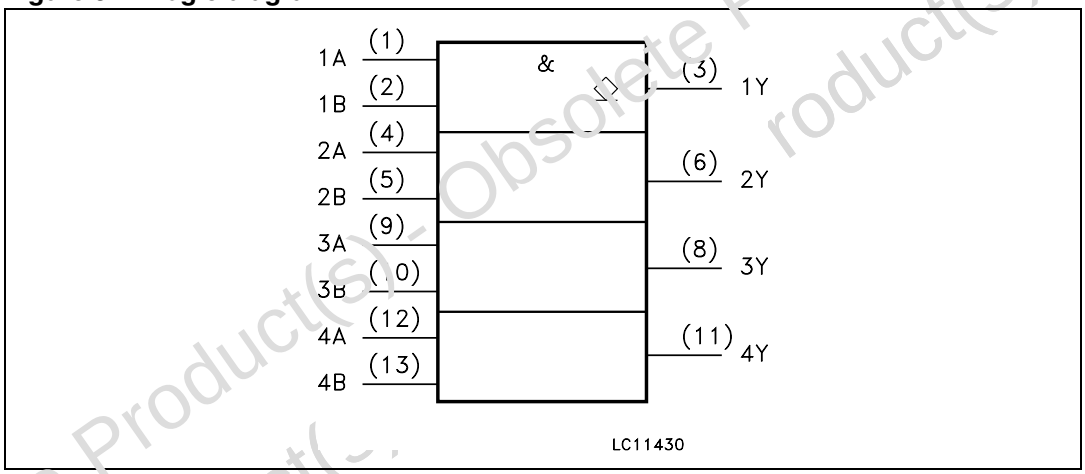

Table 2. Truth table

A	B	Y
L	L	L
L	H	L
H	L	L
H	H	Z

Note: Z : High Impedance

Obsolete Product(s) - Obsolete Product(s)

3 Maximum rating

Stressing the device above the rating listed in the “Absolute Maximum Ratings” table may cause permanent damage to the device. These are stress ratings only and operation of the device at these or any other conditions above those indicated in the Operating sections of this specification is not implied. Exposure to Absolute Maximum Rating conditions for extended periods may affect device reliability. Refer also to the STMicroelectronics SURE Program and other relevant quality documents.

Table 3. Absolute maximum ratings

Symbol	Parameter	Value	Unit
V_{CC}	Supply Voltage	-0.5 to +7	V
V_I	DC Input Voltage	-0.5 to V_{CC} + 0.5	V
V_O	DC Output Voltage	-0.5 to V_{CC} + 0.5	V
I_{IK}	DC Input Diode Current	±20	mA
I_{OK}	DC Output Diode Current	±20	mA
I_O	DC Output Current	±25	mA
I_{CC} or I_{GND}	DC V_{CC} or Ground Current	±50	mA
P_D	Power Dissipation	500(1)	mW
T_{stg}	Storage Temperature	-65 to +150	°C
T_L	Lead Temperature (10 sec)	300	°C

1. 500mW at 65 °C; derate to 300mW by 10mW/°C from 65°C to 85°C

3.1 Recommended operating conditions

Table 4. Recommended operating conditions

Symbol	Parameter		Value	Unit
V_{CC}	Supply Voltage		2 to 6	V
V_I	Input Voltage		0 to V_{CC}	V
V_O	Output Voltage		0 to V_{CC}	V
T_{op}	Operating Temperature		-55 to 125	°C
t_r, t_f	Input Rise and Fall Time	V_{CC} = 2.0V	0 to 1000	ns
		V_{CC} = 4.5V	0 to 500	ns
		V_{CC} = 6.0V	0 to 400	ns

Obsolete Product(s) - Obsolete Product(s)

4 Electrical characteristics

Table 5. DC specifications

Symbol	Parameter	Test condition		Value							Unit
		V_{CC} (V)		T_A = 25°C			-40 to 85°C		-55 to 125°C		
				Min	Typ	Max	Min	Max	Min	Max	
V_{IH}	High Level Input Voltage	2.0		1.5			1.5		1.5		V
		4.5		3.15			3.15		3.15		
		6.0		4.2			4.2		4.2		
V_{IL}	Low Level Input Voltage	2.0				0.5		0.5		0.5	V
		4.5				1.35		1.35		1.35	
		6.0				1.8		1.8		1.8	
V_{OL}	Low Level Output Voltage	2.0	I_O = 20µA		0.0	0.1		0.1		0.1	V
		4.5	I_O = 20µA		0.0	0.1		0.1		0.1	
		6.0	I_O = 20µA		0.0	0.1		0.1		0.1	
		4.5	I_O = 4.0mA		0.17	0.26		0.33		0.40	
		6.0	I_O = 5.2mA		0.18	0.26		0.33		0.40	
I_I	Input Leakage Current	6.0	V_I = V_{CC} or GND			±0.1		±1		±1	µA
I_{OZ}	Output Leakage Current	6.0	V_I = V_{IH} or V_{IL} V_O = V_{CC} or GND			±0.5		±5		±10	µA
I_{CC}	Quiescent Supply Current	6.0	V_I = V_{CC} or GND			1		10		20	µA

Obsolete Product(s) - Obsolete Product(s)
Obsolete Product(s) - Obsolete Product(s)

Table 6. AC electrical characteristics (C_L = 50 pF, Input t_r = t_f = 6ns)

Symbol	Parameter	Test Condition		Value							Unit
		V_{CC} (V)		T_A = 25°C			-40 to 85°C		-55 to 125°C		
				Min	Typ	Max	Min	Max	Min	Max	
t_{THL}	Output Transition Time	2.0			30	75		95		110	ns
		4.5			8	15		19		22	
		6.0			7	13		16		19	
t_{PLZ}	Propagation Delay Time	2.0	R_L = 1 KΩ		10	75		95		110	ns
		4.5			8	15		19		22	
		6.0			7	13		16		19	
t_{PZL}	Propagation Delay Time	2.0	R_L = 1 KΩ		20	75		95		110	ns
		4.5			8	15		19		22	
		6.0			7	13		16		19	

Table 7. Capacitive characteristics

Symbol	Parameter	Test condition		Value							Unit
		V_{CC} (V)		T_A = 25°C			-40 to 85°C		-55 to 125°C		
				Min	Typ	Max	Min	Max	Min	Max	
C_{IN}	Input Capacitance	5.0			5	10		10		10	pF
C_{OUT}	Output Capacitance	5.0			10						pF
C_{PD}	Power Dissipation Capacitance (note 1)	5.0			6.5						pF

Obsolete Product(s) - Obsolete Product(s)
Obsolete Product(s) - Obsolete Product(s)

5 Test circuit

Figure 4. Test circuit

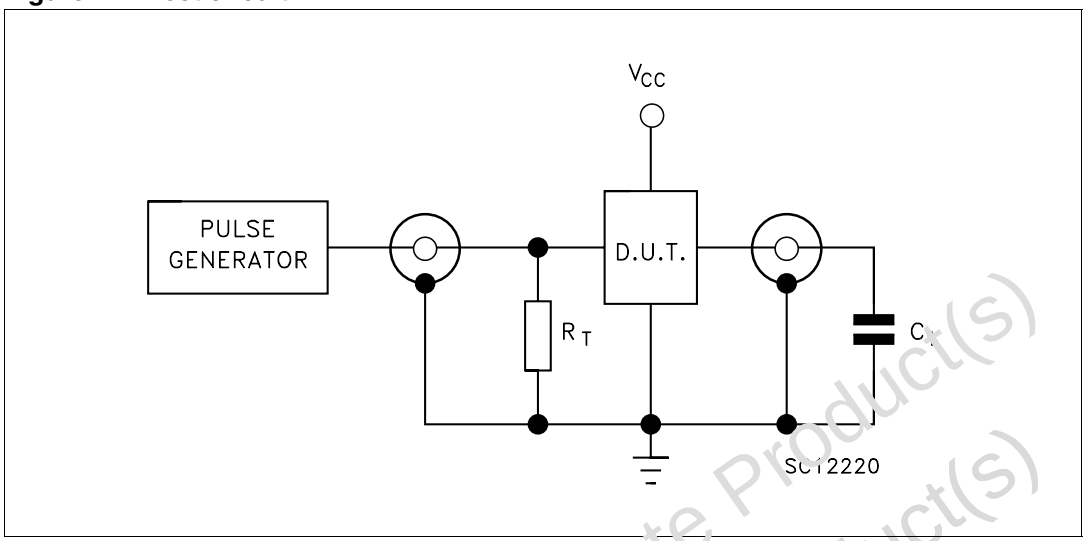

Note: *C_L = 50pF or equivalent (includes jig and probe capacitance)*
$R_T = Z_{OUT}$ of pulse generator (typically 50Ω)

6 Waveforms

Figure 5. Waveform - propagation delay (f = 1MHz; 50% duty cycle)

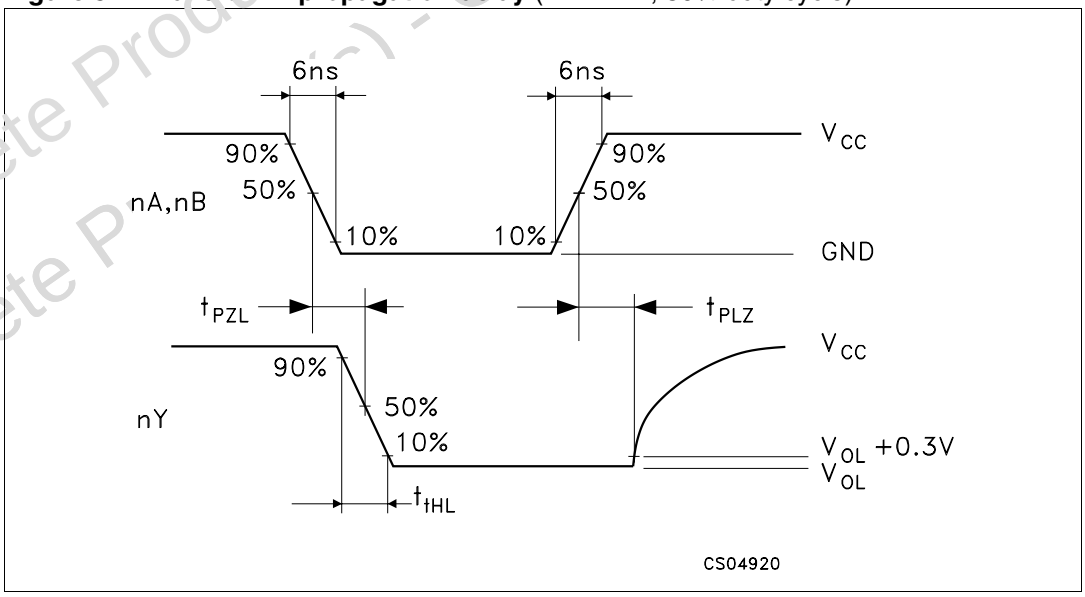

Obsolete Product(s) - Obsolete Product(s)

7 Package mechanical data

In order to meet environmental requirements, ST offers these devices in ECOPACK® packages. These packages have a Lead-free second level interconnect . The category of second level interconnect is marked on the package and on the inner box label, in compliance with JEDEC Standard JESD97. The maximum ratings related to soldering conditions are also marked on the inner box label. ECOPACK is an ST trademark. ECOPACK specifications are available at: www.st.com

Obsolete Product(s) - Obsolete Product(s)
Obsolete Product(s) - Obsolete Product(s)

Plastic DIP-14 MECHANICAL DATA

DIM.	mm.			inch		
	MIN.	TYP	MAX.	MIN.	TYP.	MAX.
a1	0.51			0.020		
B	1.39		1.65	0.055		0.065
b		0.5			0.020	
b1		0.25			0.010	
D			20			0.787
E		8.5			0.335	
e		2.54			0.100	
e3		15.24			0.600	
F			7.1			0.280
I			5.1			0.201
L		3.3			0.130	
Z	1.27		2.54	0.050		0.100

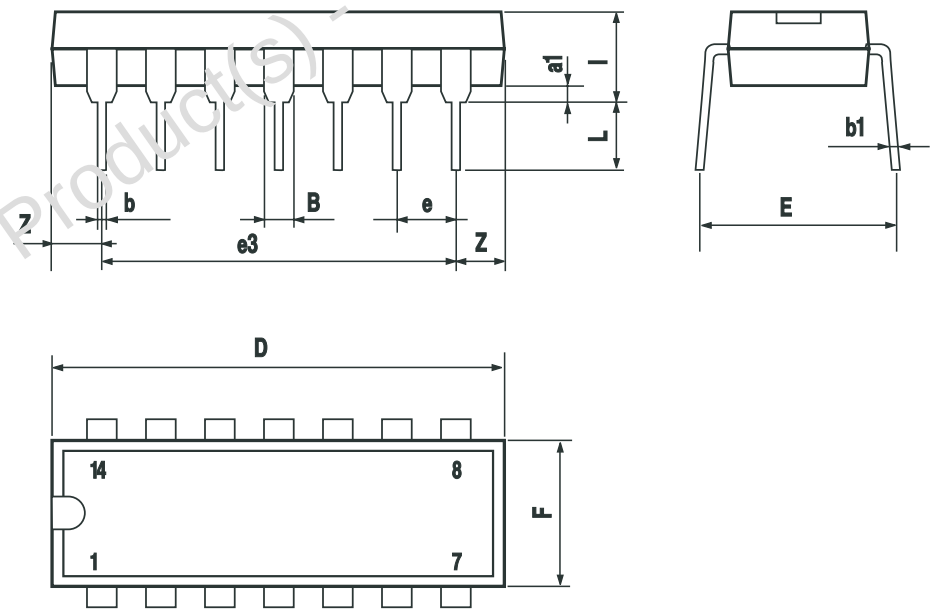

P001A

Obsolete Product(s) - Obsolete Product(s)

SO-14 MECHANICAL DATA

DIM.	mm.			inch		
	MIN.	TYP	MAX.	MIN.	TYP.	MAX.
A	1.35		1.75	0.053		0.069
A1	0.1		0.25	0.004		0.010
A2	1.10		1.65	0.043		0.065
B	0.33		0.51	0.013		0.020
C	0.19		0.25	0.007		0.010
D	8.55		8.75	0.337		0.344
E	3.8		4.0	0.150		0.157
e		1.27			0.050	
H	5.8		6.2	0.228		0.244
h	0.25		0.50	0.010		0.020
L	0.4		1.27	0.016		0.050
k	0°		8°	0°		8°
ddd			0.100			0.004

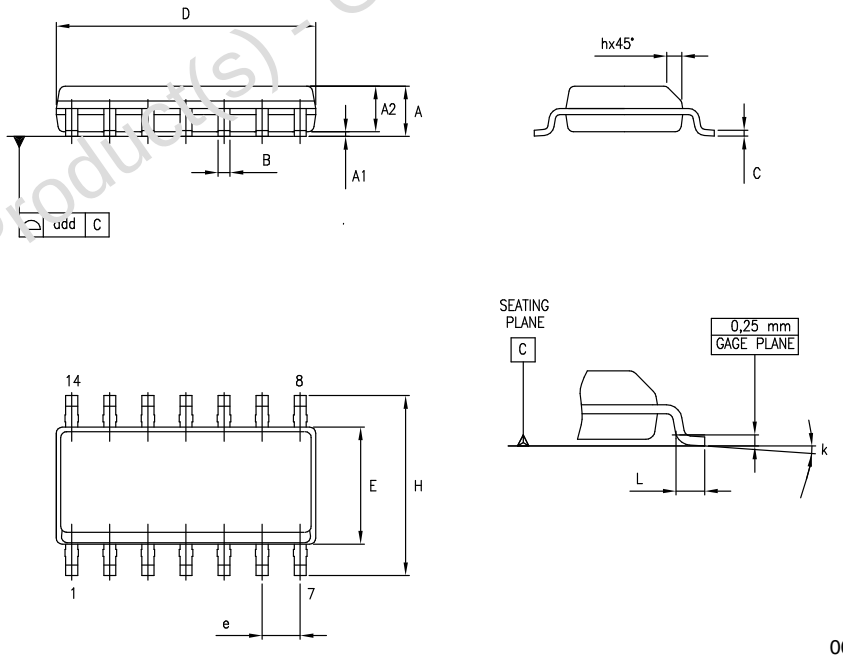

Obsolete Product(s) - Obsolete Product(s)

8 Revision history

Table 8. Revision history

Date	Revision	Changes
07-Aug-2001	1	First Release
19-May-2006	2	New template, deleted TSSOP14 package information

Obsolete Product(s) - Obsolete Product(s)
Obsolete Product(s) - Obsolete Product(s)

Please Read Carefully:

Information in this document is provided solely in connection with ST products. STMicroelectronics NV and its subsidiaries ("ST") reserve the right to make changes, corrections, modifications or improvements, to this document, and the products and services described herein at any time, without notice.

All ST products are sold pursuant to ST's terms and conditions of sale.

Purchasers are solely responsible for the choice, selection and use of the ST products and services described herein, and ST assumes no liability whatsoever relating to the choice, selection or use of the ST products and services described herein.

No license, express or implied, by estoppel or otherwise, to any intellectual property rights is granted under this document. If any part of this document refers to any third party products or services it shall not be deemed a license grant by ST for the use of such third party products or services, or any intellectual property contained therein or considered as a warranty covering the use in any manner whatsoever of such third party products or services or any intellectual property contained therein.

UNLESS OTHERWISE SET FORTH IN ST'S TERMS AND CONDITIONS OF SALE ST DISCLAIMS ANY EXPRESS OR IMPLIED WARRANTY WITH RESPECT TO THE USE AND/OR SALE OF ST PRODUCTS INCLUDING WITHOUT LIMITATION IMPLIED WARRANTIES OF MERCHANTABILITY, FITNESS FOR A PARTICULAR PURPOSE (AND THEIR EQUIVALENTS UNDER THE LAWS OF ANY JURISDICTION), OR INFRINGEMENT OF ANY PATENT, COPYRIGHT OR OTHER INTELLECTUAL PROPERTY RIGHT.

UNLESS EXPRESSLY APPROVED IN WRITING BY AN AUTHORIZE REPRESENTATIVE OF ST, ST PRODUCTS ARE NOT DESIGNED, AUTHORIZED OR WARRANTED FOR USE IN MILITARY, AIR CRAFT, SPACE, LIFE SAVING, OR LIFE SUSTAINING APPLICATIONS, NOR IN PRODUCTS OR SYSTEMS, WHERE FAILURE OR MALFUNCTION MAY RESULT IN PERSONAL INJURY, DEATH, OR SEVERE PROPERTY OR ENVIRONMENTAL DAMAGE.

Resale of ST products with provisions different from the statements and/or technical features set forth in this document shall immediately void any warranty granted by ST for the ST product or service described herein and shall not create or extend in any manner whatsoever, any liability of ST.

ST and the ST logo are trademarks or registered trademarks of ST in various countries.

Information in this document supersedes and replaces all information previously supplied.

The ST logo is a registered trademark of STMicroelectronics. All other names are the property of their respective owners.

© 2006 STMicroelectronics - All rights reserved

STMicroelectronics group of companies

Australia - Belgium - Brazil - Canada - China - Czech Republic - Finland - France - Germany - Hong Kong - India - Israel - Italy - Japan - Malaysia - Malta - Morocco - Singapore - Spain - Sweden - Switzerland - United Kingdom - United States of America

www.st.com

Obsolete Product(s) - Obsolete Product(s)